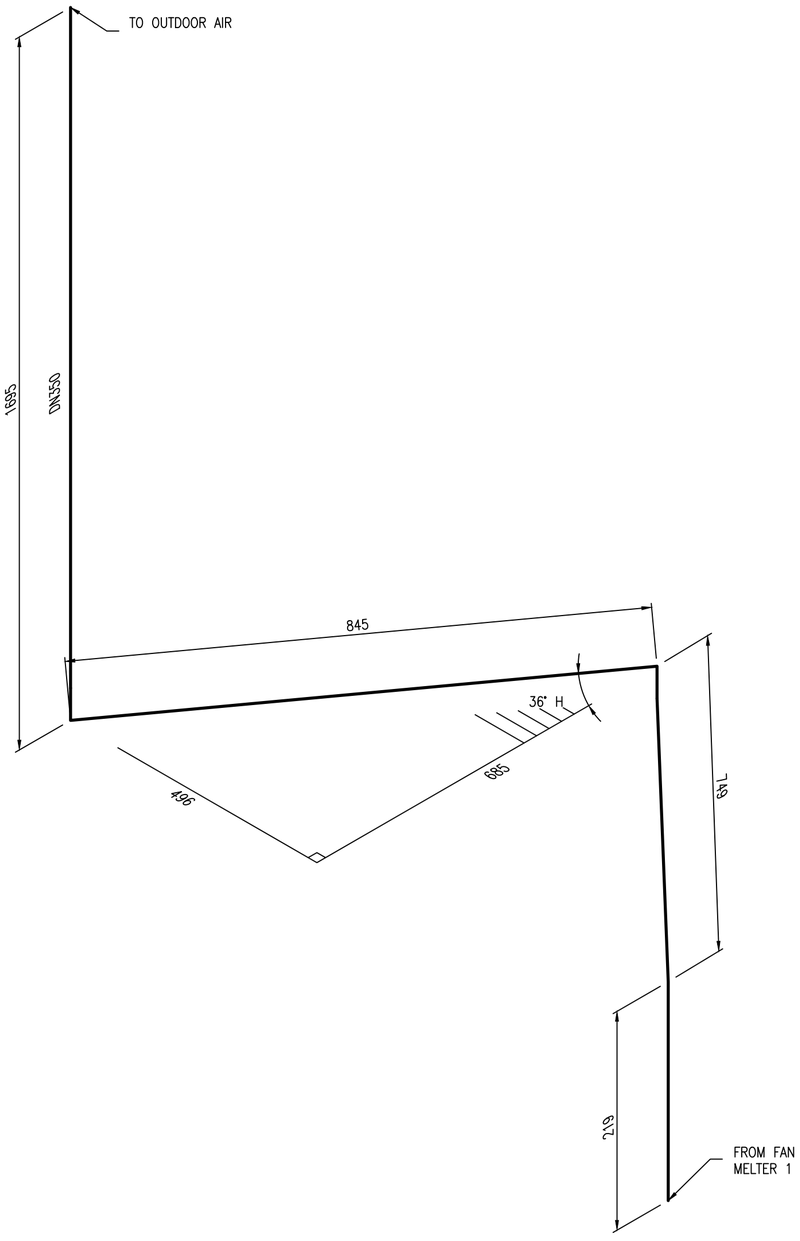

Rev.	Modification	Name	Date

This drawing is property of INSERTEC. Must not be copier or transferred to third parties in any way without written authorization.

Tolerance for dimensions without tol. according to ISO 2768-mK

More than	0.5	3	6	30	120	400	1000	2000
Less	3	6	30	120	400	1000	2000	4000
Machine Tool	±	±	±	±	±	±	±	±
Welded	0.1	± 0.1	± 0.2	± 0.3	± 0.5	± 0.8	± 1.2	± 2
		0.5	1	1.5	2	3	4	6

	Name	Date
Draw		18/09/2025
Checked		18/09/2025
Verified		19/09/2025

Material: 316 L

Weight (kg):

Customer: ALINVEST

Format: A2

Scale: 1:15

Title: ALINVEST FORGING EXHAUST AIR PIPING

insertec Furnaces & Refractories

Project Methode:

Part Number: LINE DN350 TO OUTDOOR

Revision: A

Customer Number:

Sheet: 1/1